Using voltage division at the input to find V,

$$V = V_S\left(\frac{R_{\text{in}}}{R_{\text{in}} + R_S}\right)$$

Combining these two expressions, we can solve for the gain:

$$A_V = \frac{V_o}{V_S} = -g_m\left(\frac{R_{\text{in}}}{R_{\text{in}} + R_S}\right)(R_o//R_L)$$

Using the parameter values for the three transistors, we find that the best alternative is transistor number 2, which has a gain error of

$$\text{Percent error} = \left(\frac{211.8 - 200}{200}\right) \times 100\% = 5.9\%$$

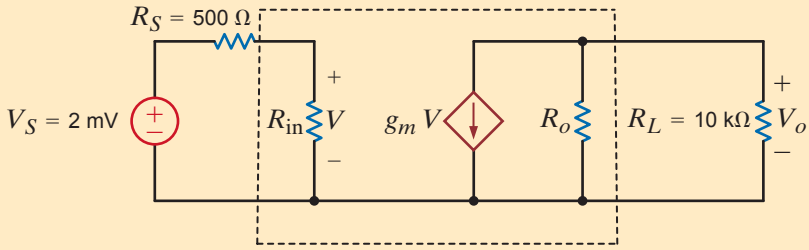

Figure 2.53
Transistor amplifier circuit model.

SUMMARY

- ***Ohm's law*** $V = IR$
- ***The passive sign convention with Ohm's law*** The current enters the resistor terminal with the positive voltage reference.
- ***Kirchhoff's current law (KCL)*** The algebraic sum of the currents leaving (entering) a node is zero.
- ***Kirchhoff's voltage law (KVL)*** The algebraic sum of the voltages around any closed path is zero.
- ***Solving a single-loop circuit*** Determine the loop current by applying KVL and Ohm's law.
- ***Solving a single-node-pair circuit*** Determine the voltage between the pair of nodes by applying KCL and Ohm's law.
- ***The voltage-division rule*** The voltage is divided between two series resistors in direct proportion to their resistance.
- ***The current-division rule*** The current is divided between two parallel resistors in reverse proportion to their resistance.
- ***The equivalent resistance of a network of resistors*** Combine resistors in series by adding their resistances. Combine resistors in parallel by adding their conductances. The wye-to-delta and delta-to-wye transformations are also an aid in reducing the complexity of a network.
- ***Short circuit*** Zero resistance, zero voltage; the current in the short is determined by the rest of the circuit.
- ***Open circuit*** Zero conductance, zero current; the voltage across the open terminals is determined by the rest of the circuit.

PROBLEMS

2.1 Determine the current and power dissipated in the resistor in Fig. P2.1.

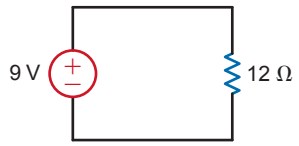

Figure P2.1

2.2 Determine the current and power dissipated in the resistors in Fig. P2.2.

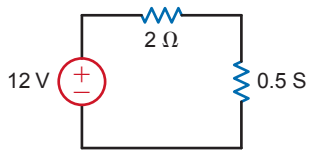

Figure P2.2

2.3 Determine the voltage across the resistor in Fig. P2.3 and the power dissipated.

Figure P2.3

2.4 Given the circuit in Fig. P2.4, find the voltage across each resistor and the power dissipated in each.

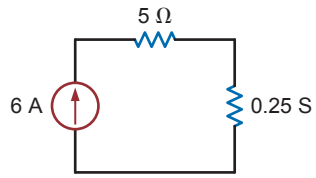

Figure P2.4

2.5 In the network in Fig. P2.5, the power absorbed by R_x is 20 mW. Find R_x.

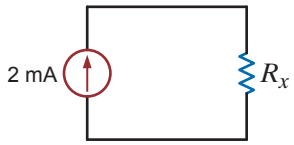

Figure P2.5

2.6 In the network in Fig. P2.6, the power absorbed by G_x is 20 mW. Find G_x.

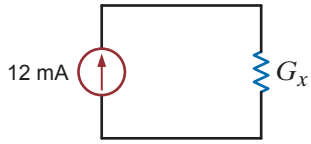

Figure P2.6

2.7 A model for a standard two D-cell flashlight is shown in Fig. P2.7. Find the power dissipated in the lamp.

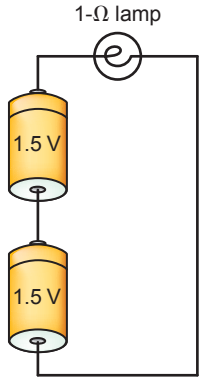

Figure P2.7

2.8 An automobile uses two halogen headlights connected as shown in Fig. P2.8. Determine the power supplied by the battery if each headlight draws 3 A of current.

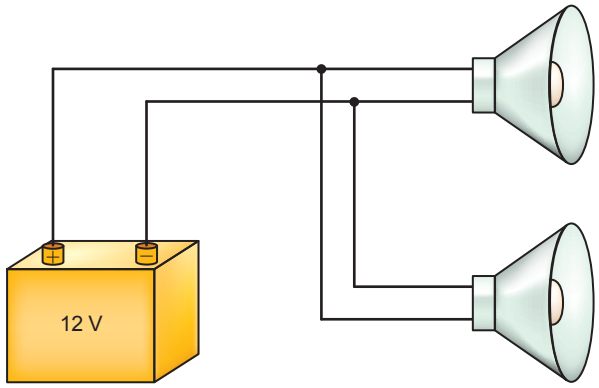

Figure P2.8

2.9 Many years ago a string of Christmas tree lights was manufactured in the form shown in Fig. P2.9a. Today the lights are manufactured as shown in Fig. P2.9b. Is there a good reason for this change?

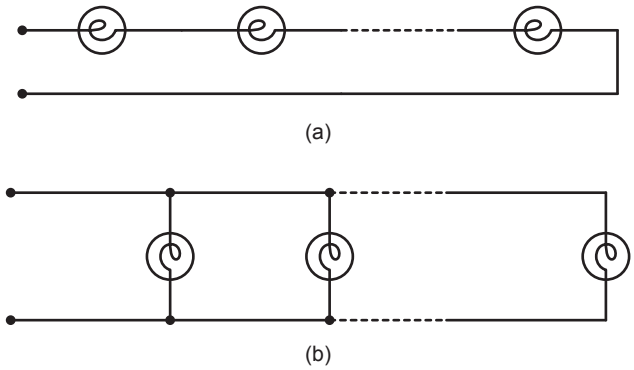

Figure P2.9

2.10 Find I_1 in the network in Fig. P2.10.

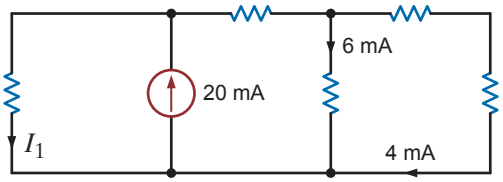

Figure P2.10

2.11 Find I_1 in the network in Fig. P2.11.

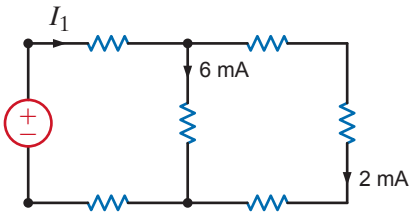

Figure P2.11

2.12 Find I_1 and I_2 in the network in Fig. P2.12.

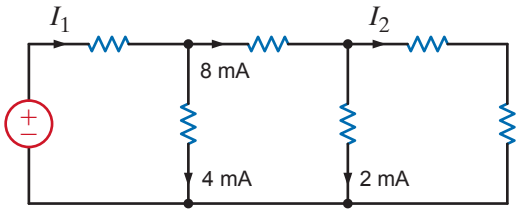

Figure P2.12

2.13 Find I_1 in the circuit in Fig. P2.13.

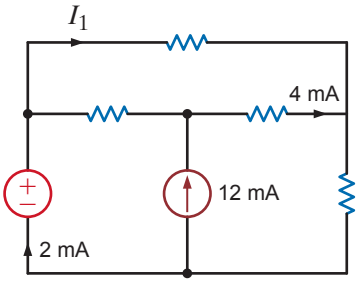

Figure P2.13

2.14 Find I_x in the network in Fig. P2.14.

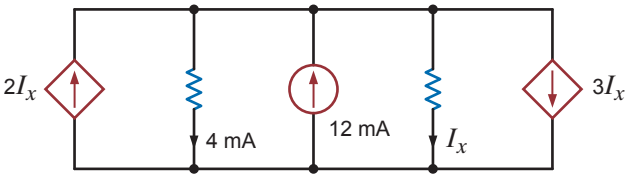

Figure P2.14

2.15 Determine I_L in the circuit in Fig. P2.15.

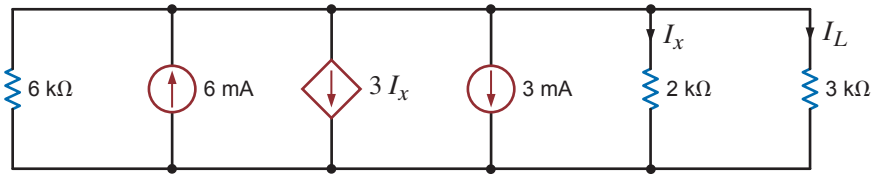

Figure P2.15

2.16 Find I_o and I_1 in the circuit in Fig. P2.16.

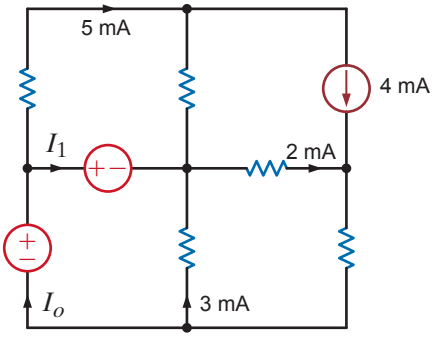

Figure P2.16

2.17 Find I_1 in the network in Fig. P2.17.

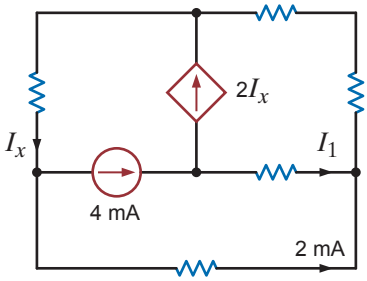

Figure P2.17

2.18 Find I_x, I_y, and I_z in the network in Fig. P2.18.

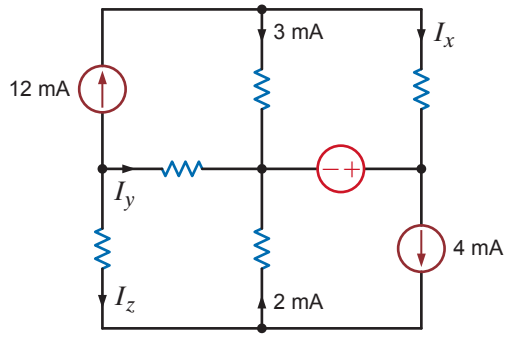

Figure P2.18

2.19 Find I_1 in the circuit in Fig. P2.19.

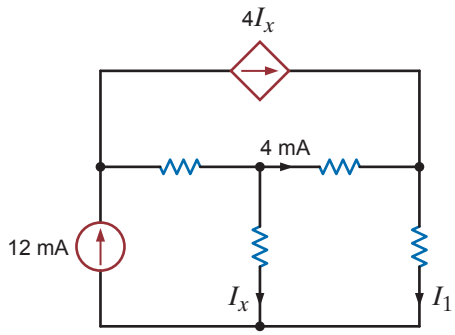

Figure P2.19

2.20 Find I_1 in the network in Fig. P2.20.

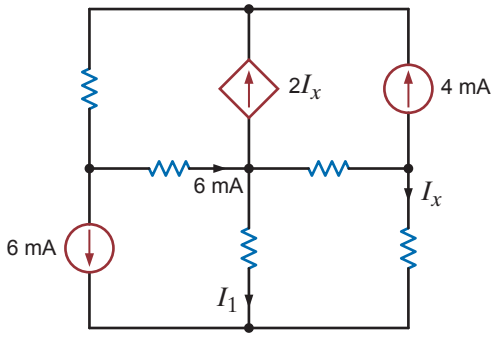

Figure P2.20

2.21 Find I_1, I_2, and I_3 in the network in Fig. P2.21.

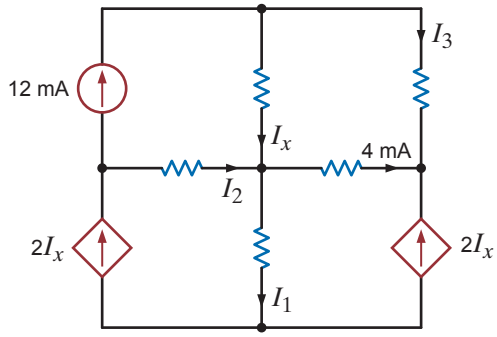

Figure P2.21

2.22 In the network in Fig. P2.22, Find I_1, I_2 and I_3 and show that KCL is satisfied at the boundary.

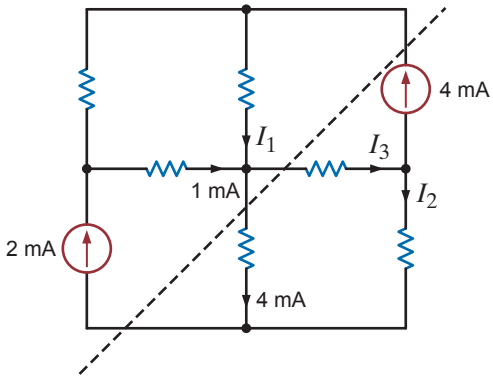

Figure P2.22

2.23 Find V_{bd} in the circuit in Fig. P2.23.

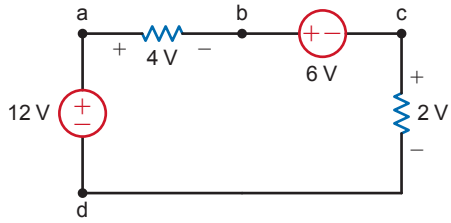

Figure P2.23

2.24 Find V_{ad} in the network in Fig. P2.24.

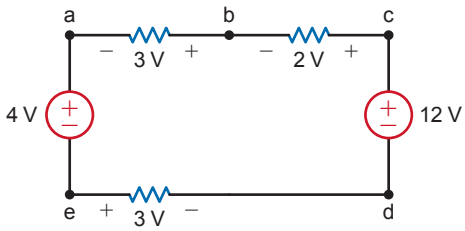

Figure P2.24

2.25 Find V_{fb} and V_{ec} in the circuit in Fig. P2.25.

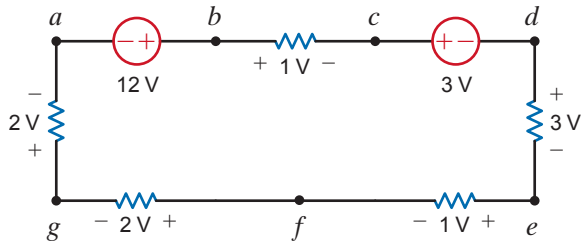

Figure P2.25

2.26 Find V_{ae} and V_{cf} in the circuit in Fig. P2.26.

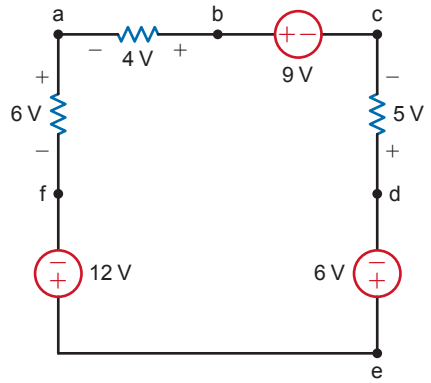

Figure P2.26

2.27 Given the circuit diagram in Fig. P2.27, find the following voltages: V_{da}, V_{bh}, V_{gc}, V_{di}, V_{fa}, V_{ac}, V_{ai}, V_{hf}, V_{fb}, and V_{dc}.

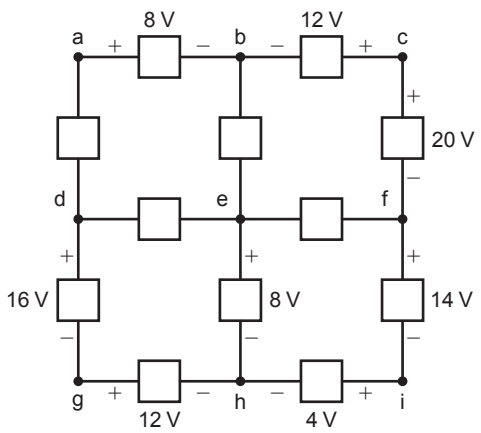

Figure P2.27

2.28 Find V_x and V_y in the circuit in Fig. P2.28.

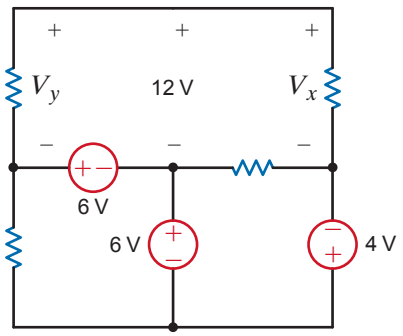

Figure P2.28

2.29 Find V_x and V_y in the circuit in Fig. P2.29.

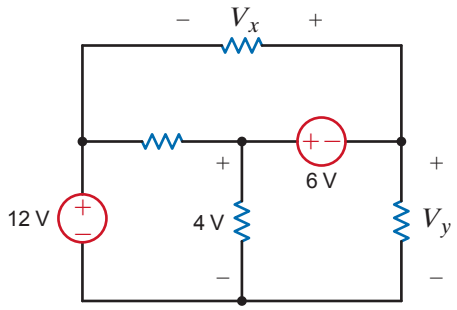

Figure P2.29

2.30 Find V_1, V_2 and V_3 in the network in Fig. P2.30.

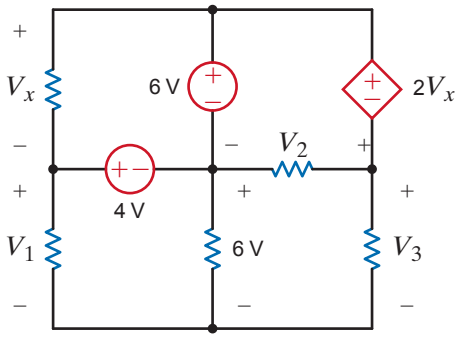

Figure P2.30

2.31 Find V_o in the network in Fig. P2.31.

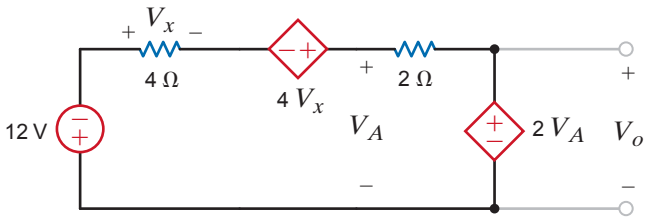

Figure P2.31

2.32 Find V_o in the circuit in Fig. P2.32.

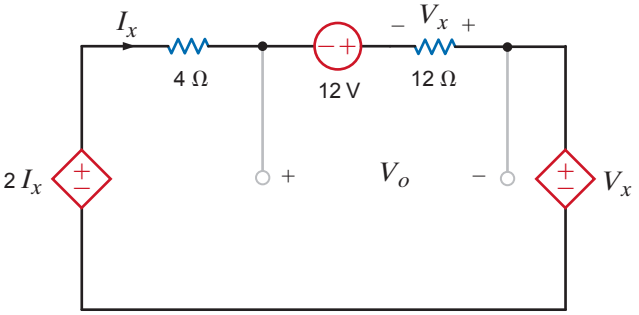

Figure P2.32

2.33 The 10-V source absorbs 2.5 mW of power. Calculate V_{ba} and the power absorbed by the dependent voltage source in Fig. P2.33.

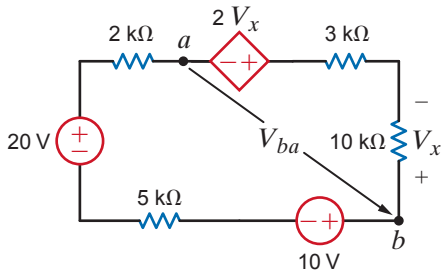

Figure P2.33

2.34 Find V_1, V_2, and V_3 in the network in Fig. P2.34.

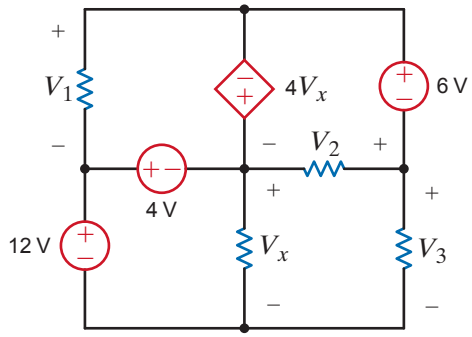

Figure P2.34

2.35 The 10-V source in Fig. P.2.35 is supplying 50 W. Determine R_1.

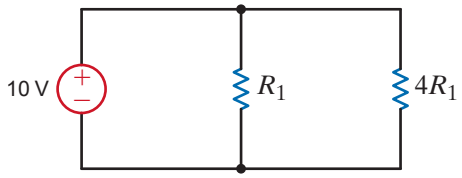

Figure P2.35

2.36 Find V_1 and V_2 in Fig. P2.36.

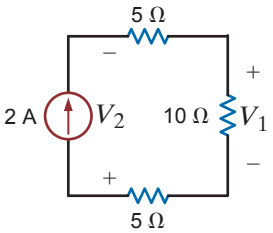

Figure P2.36

2.37 Find V_{bd} in the network in Fig. P2.37.

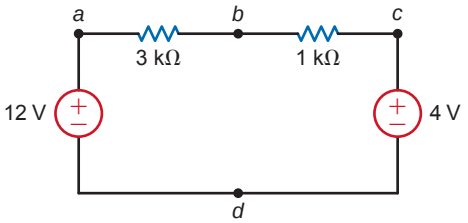

Figure P2.37

2.38 Find V_x in the circuit in Fig. P2.38.

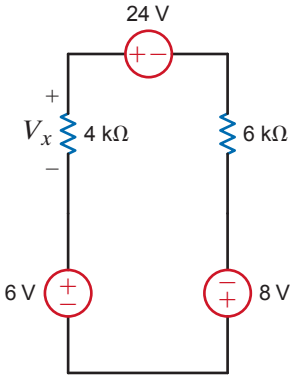

Figure P2.38

2.39 Find V_{ab} in the network in Fig. P2.39.

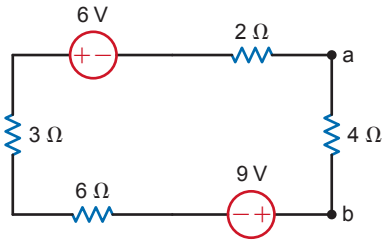

Figure P2.39

2.40 Find V_x and the power supplied by the 15-V source in the circuit in Fig. P2.40.

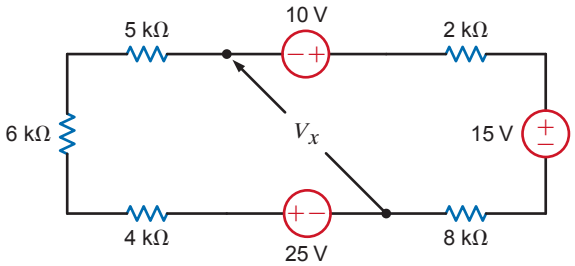

Figure P2.40

2.41 Find V_1 in the network in Fig. P2.41.

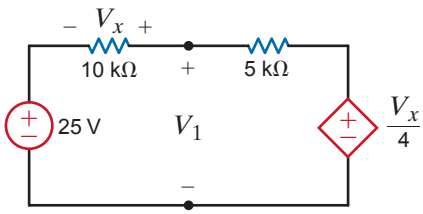

Figure P2.41

2.42 Find the power supplied by each source, including the dependent source, in Fig. P2.42.

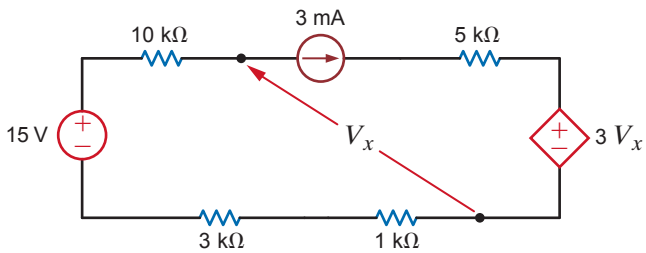

Figure P2.42

2.43 Find the power absorbed by the dependent voltage source in the circuit in Fig. P2.43.

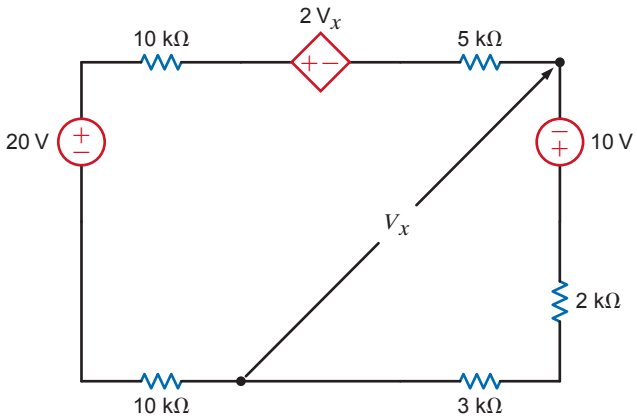

Figure P2.43

2.44 Find the power absorbed by the dependent source in the circuit in Fig. P2.44.

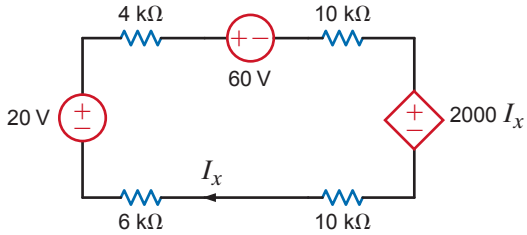

Figure P2.44

2.45 The 100-V source in the circuit in Fig. P2.45 is supplying 200 W. Solve for V_2.

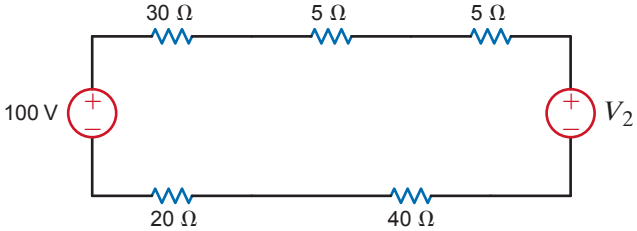

Figure P2.45

2.46 Find the value of V_2 in Fig. P2.46 such that $V_1 = 0$.

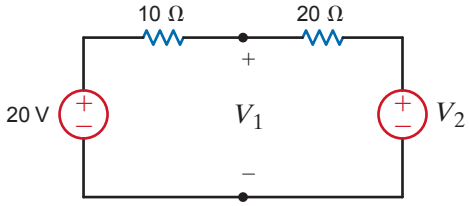

Figure P2.46

2.47 Find I_o in the network in Fig. P2.47.

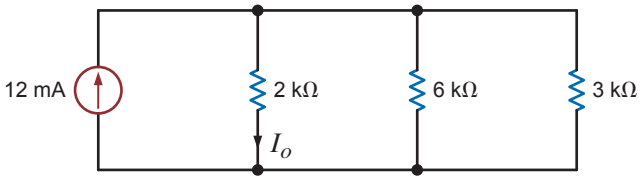

Figure P2.47

2.48 Find I_o in the network in Fig. P2.48.

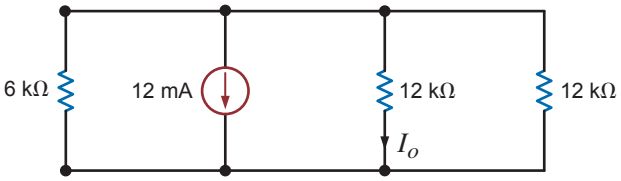

Figure P2.48

2.49 Find the power supplied by each source in the circuit in Fig. P2.49.

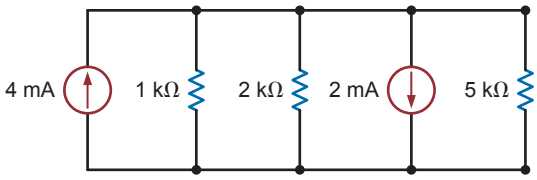

Figure P2.49

2.50 Find the current I_A in the circuit in Fig. P2.50.

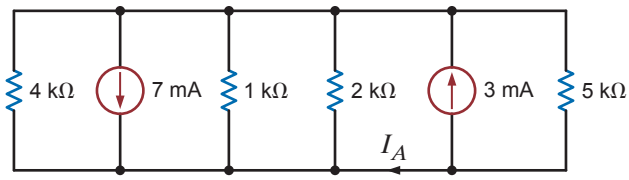

Figure P2.50

2.51 Find I_o in the network in Fig. P2.51.

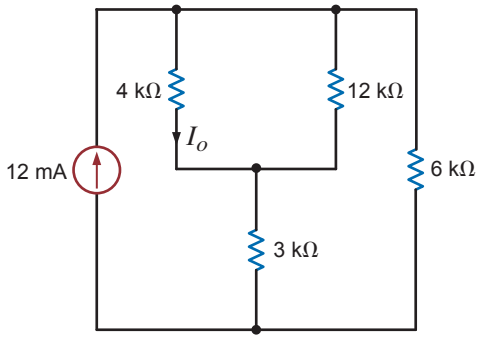

Figure P2.51

2.52 Find I_o in the network in Fig. P2.52.

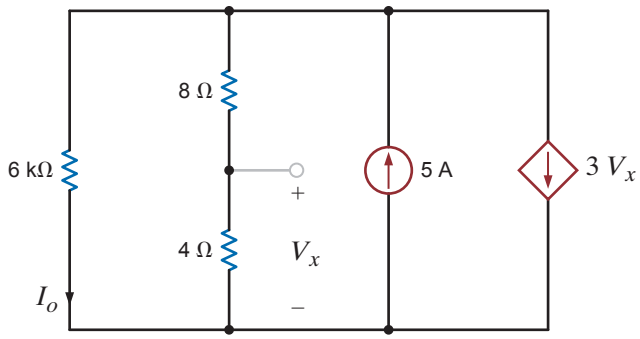

Figure P2.52

2.53 Determine I_L in the circuit in Fig. P2.53.

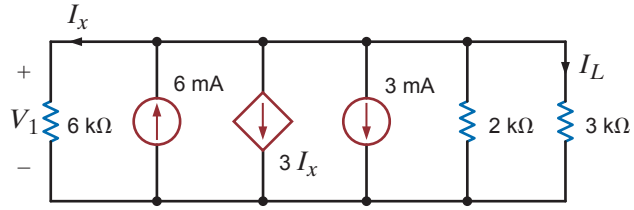

Figure P2.53

2.54 Find the power absorbed by the dependent source in the network in Fig. P2.54.

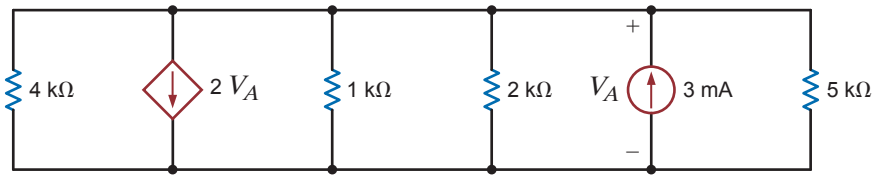

Figure P2.54

2.55 Find R_{AB} in the circuit in Fig. P2.55.

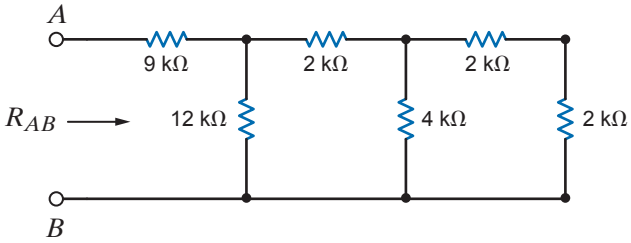

Figure P2.55

2.56 Find R_{AB} in the network in Fig. P2.56.

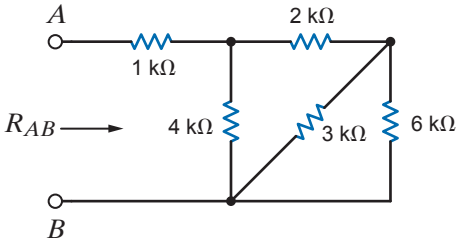

Figure P2.56

2.57 Find R_{AB} in the circuit in Fig. P2.57.

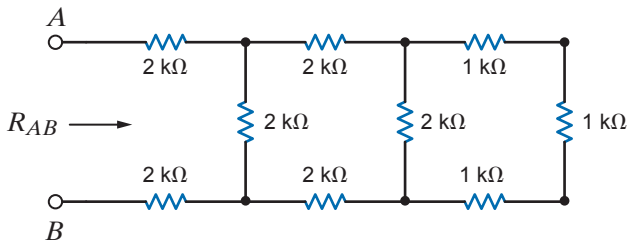

Figure P2.57

2.58 Find R_{AB} in the network in Fig. P2.58.

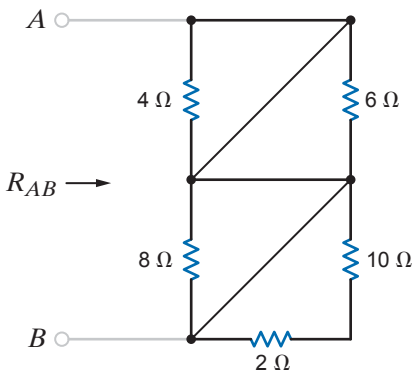

Figure P2.58

2.59 Find R_{AB} in the circuit in Fig. P2.59.

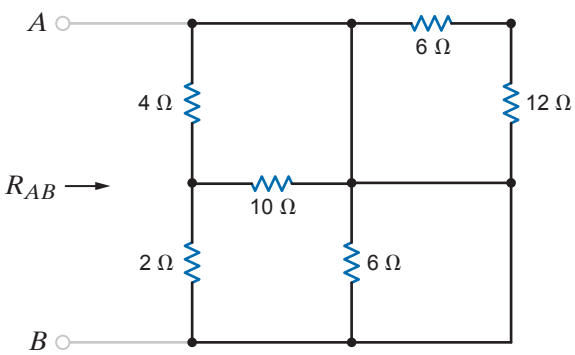

Figure P2.59

2.60 Find R_{AB} in the network in Fig. P2.60.

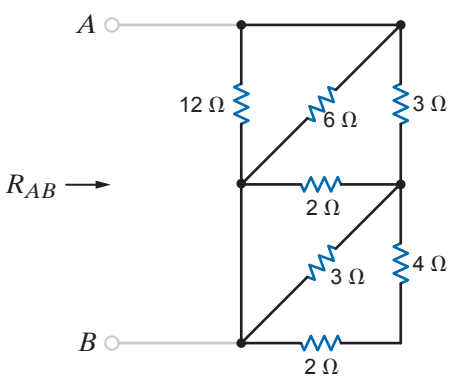

Figure P2.60

2.61 Find R_{AB} in the circuit in Fig. P2.61.

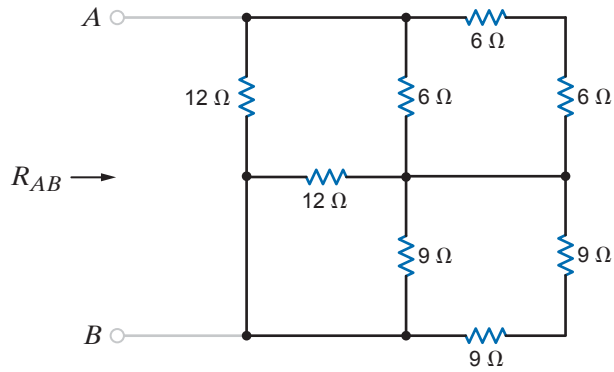

Figure P2.61

2.62 Find R_{AB} in the network in Fig. P2.62.

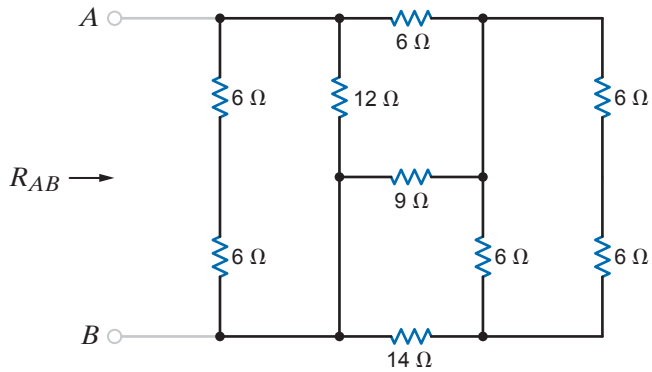

Figure P2.62

2.63 Find the equivalent resistance R_{eq} in the network in Fig. P2.63.

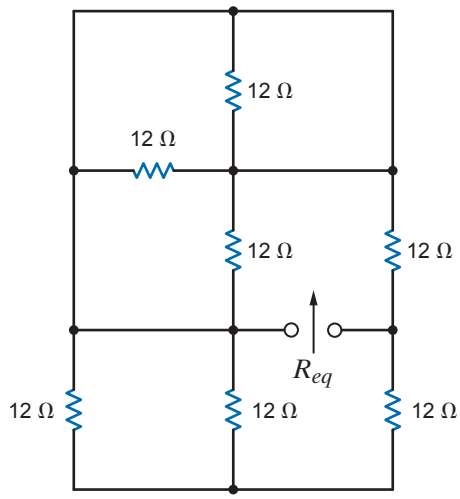

Figure P2.63

2.64 Find the equivalent resistance looking in at terminals a-b in the circuit in Fig. P2.64.

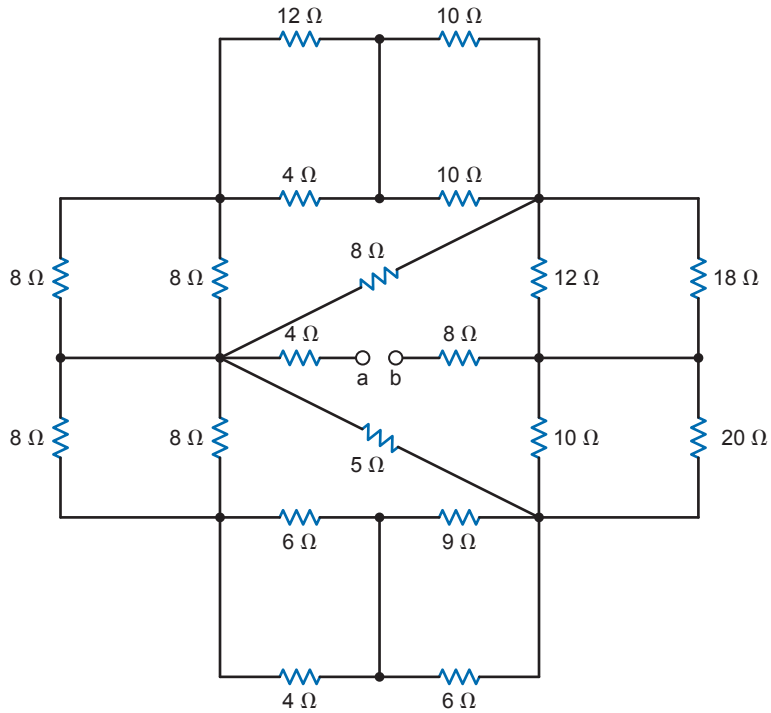

Figure P2.64

2.65 Given the resistor configuration shown in Fig. P2.65, find the equivalent resistance between the following sets of terminals: (1) a and b, (2) b and c, (3) a and c, (4) d and e, (5) a and e, (6) c and d, (7) a and d, (8) c and e, (9) b and d, and (10) b and e.

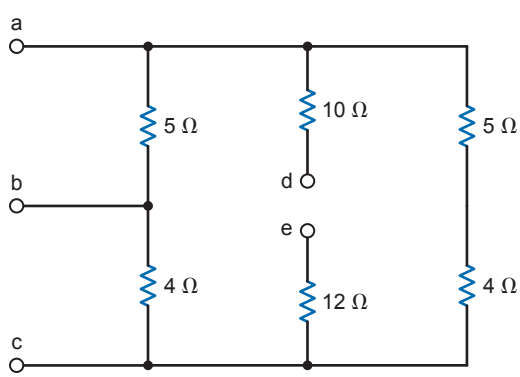

Figure P2.65

2.66 Seventeen possible equivalent resistance values may be obtained using three resistors. Determine the seventeen different values if you are given resistors with standard values: 47 Ω, 33 Ω, and 15 Ω.

2.67 Find I_1 and V_0 in the circuit in Fig. P2.67.

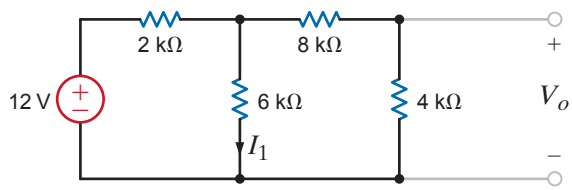

Figure P2.67

2.68 Find I_1 and V_0 in the circuit in Fig. P2.68.

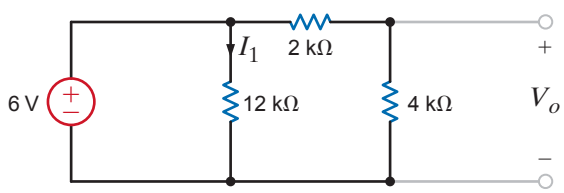

Figure P2.68

2.69 Find V_{ab} and V_{dc} in the circuit in Fig. P2.69.

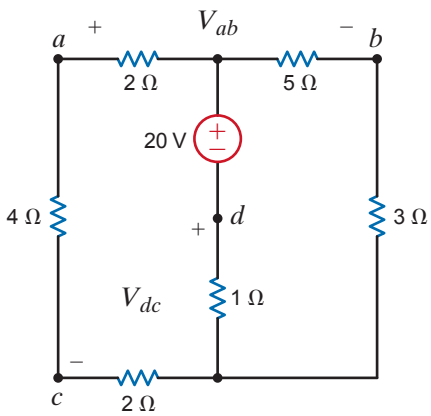

Figure P2.69

2.70 Find V_1 and I_A in the network in Fig. P2.70.

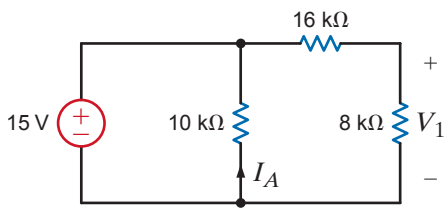

Figure P2.70

2.71 Find I_o in the network in Fig. P2.71.

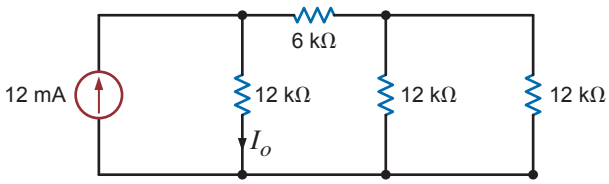

Figure P2.71

2.72 Determine I_o in the circuit in Fig. P2.72.

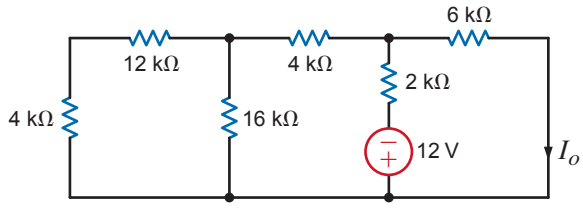

Figure P2.72

2.73 Determine V_o in the network in Fig. P2.73.

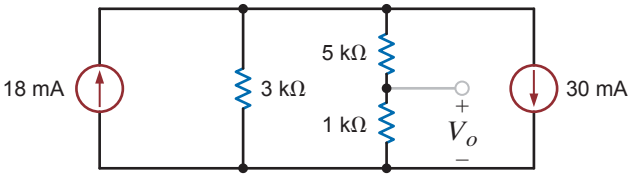

Figure P2.73

2.74 Calculate V_{ab} in Fig. P2.74.

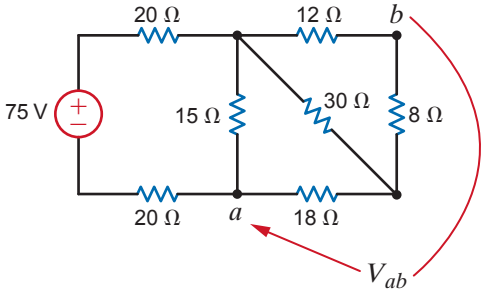

Figure P2.74

2.75 Calculate V_{AB} in Fig. P2.75.

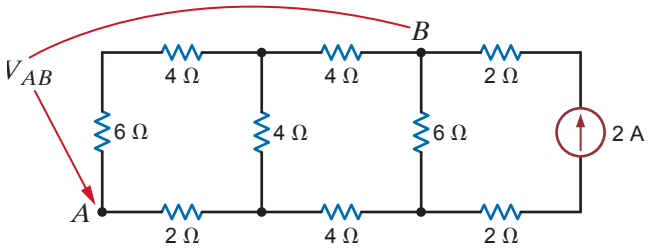

Figure P2.75

2.76 Calculate V_{ab} and V_1 in Fig. P2.76.

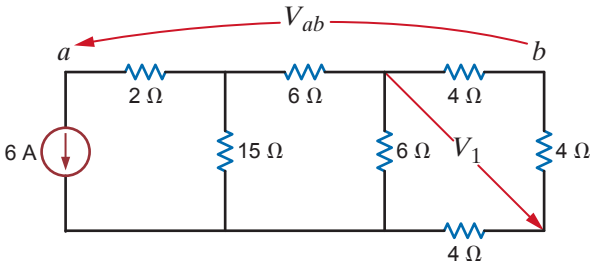

Figure P2.76

2.77 Calculate V_{AB} in Fig. P2.77.

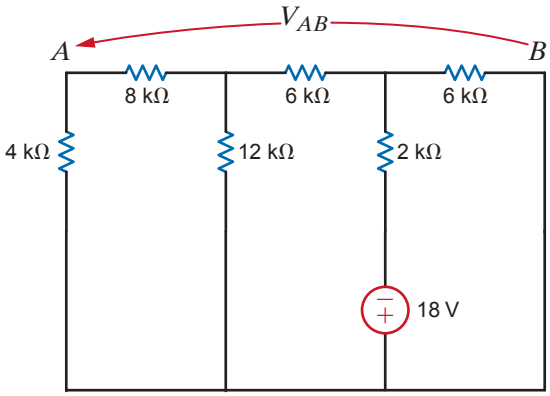

Figure P2.77

2.78 Calculate V_{AB} and I_1 in Fig. P2.78.

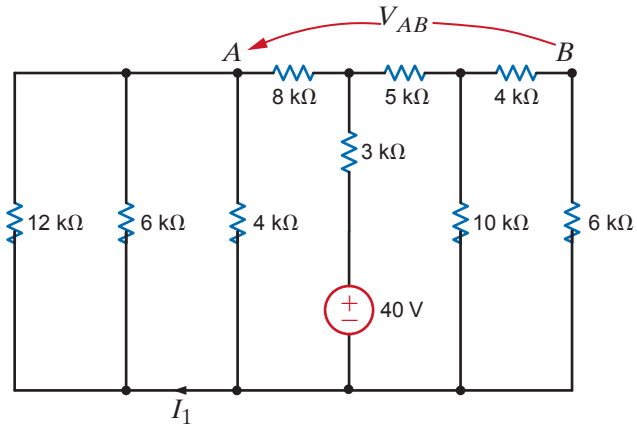

Figure P2.78

2.79 Calculate V_{AB} and I_1 in Fig. P2.79.

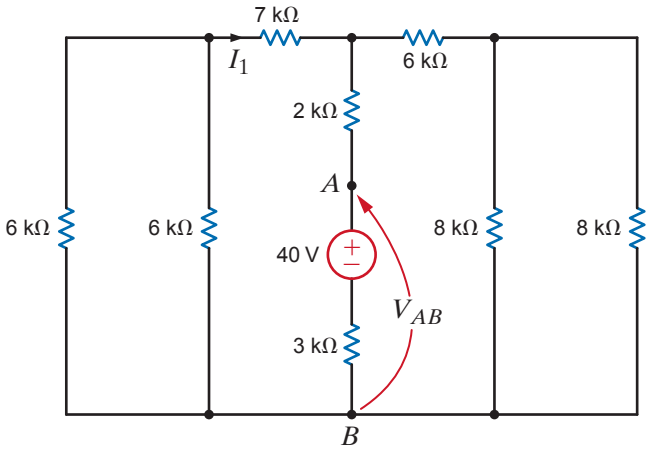

Figure P2.79

2.80 Find V_{ab} in Fig. P2.80.

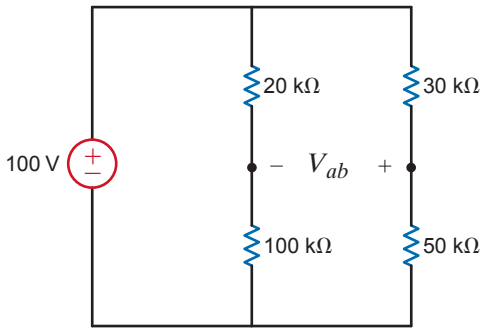

Figure P2.80

2.81 If $V_o = 4$ V in the network in Fig. P2.81, find V_S.

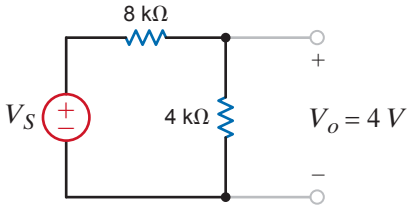

Figure P2.81

2.82 If $I_o = 5$ mA in the circuit in Fig. P2.82, find I_S.

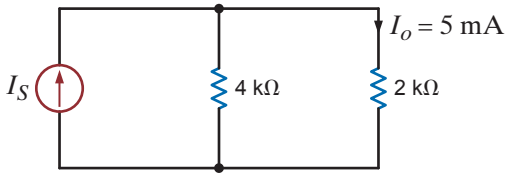

Figure P2.82

2.83 If $I_o = 2$ mA in the circuit in Fig. P2.83, find V_S.

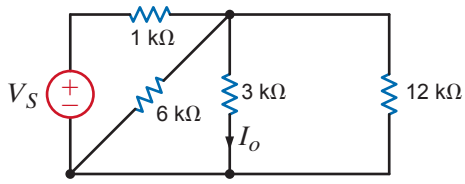

Figure P2.83

2.84 Find the value of V_S in the network in Fig. P2.84 such that the power supplied by the current source is 0.

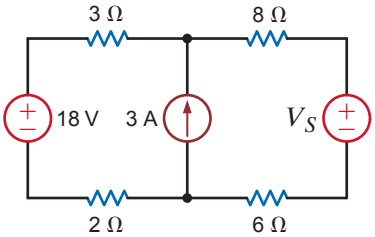

Figure P2.84

2.85 In the network in Fig. P2.85, $V_o = 6$ V. Find I_S.

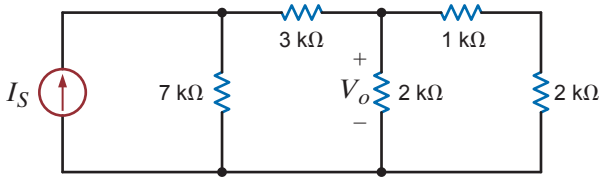

Figure P2.85

2.86 Find the value of V_1 in the network in Fig. P2.86 such that $V_a = 0$.

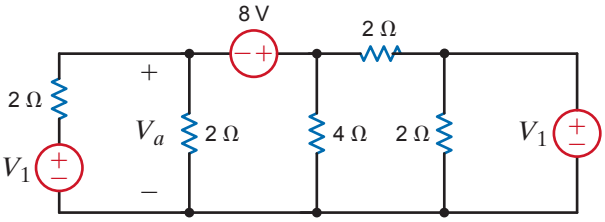

Figure P2.86

2.87 If $V_1 = 5$ V in the circuit in Fig. P2.87, find I_S.

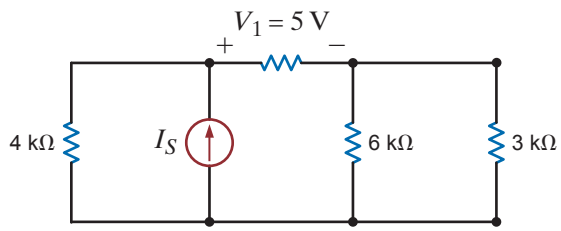

Figure P2.87

2.88 In the network in Fig. P2.88, $V_1 = 12$ V. Find V_S.

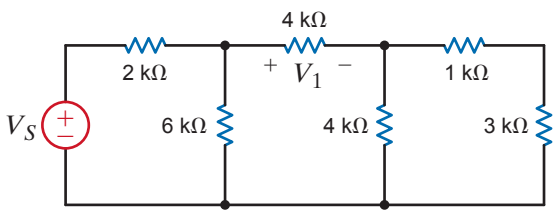

Figure P2.88

2.89 Given that $V_o = 4$ V in the network in Fig. P2.89, find V_S.

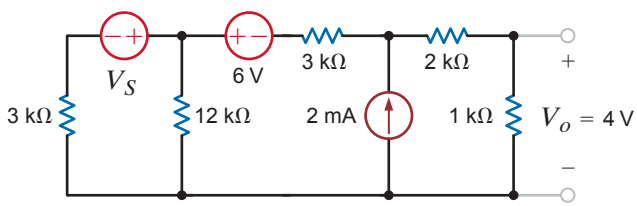

Figure P2.89

2.90 If $V_R = 15$ V, find V_X in Fig. P2.90.

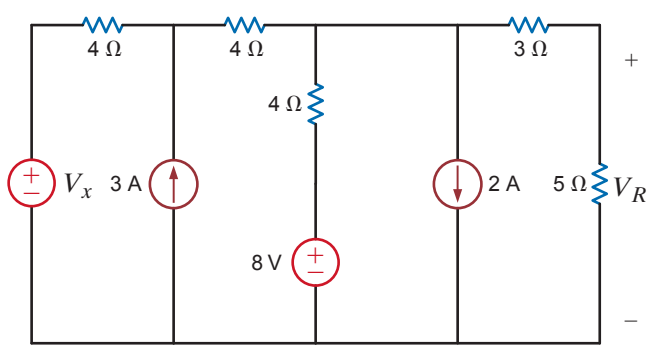

Figure P2.90

2.91 If $V_2 = 4$ V in Fig. P2.91, calculate V_x.

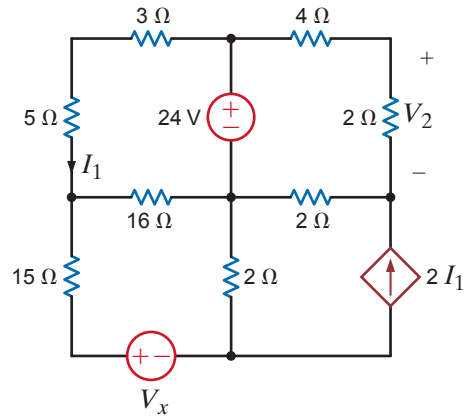

Figure P2.91

2.92 Find the value of I_A in the network in Fig. P2.92.

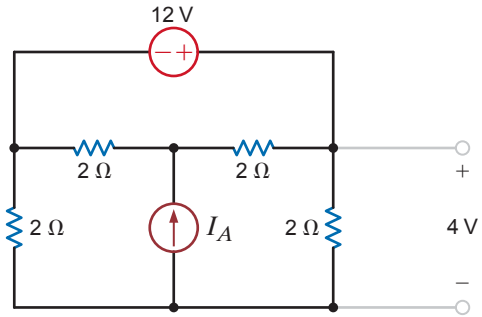

Figure P2.92

2.93 Find the value of I_A in the circuit in Fig. P2.93.

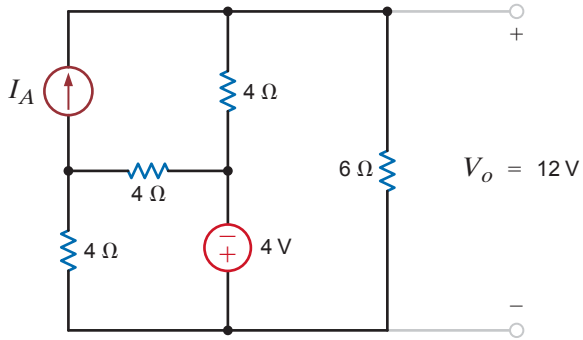

Figure P2.93

2.94 Find in value of the current source I_A in the network in Fig. P2.94.

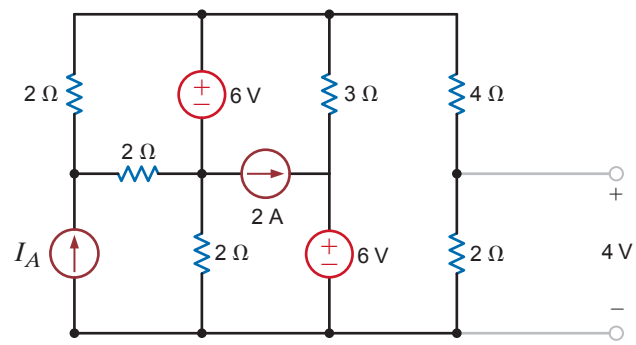

Figure P2.94

2.95 Given $V_o = 12$ V, find the value of I_A in the circuit in Fig. P2.95.

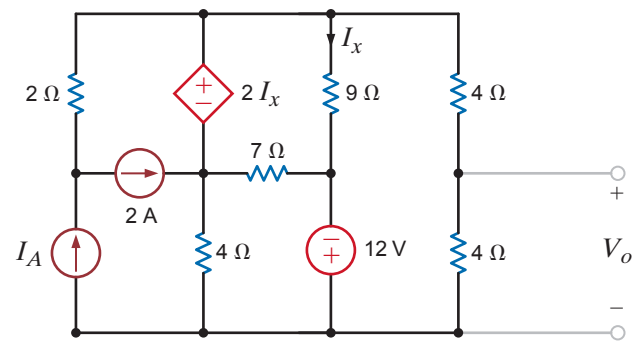

Figure P2.95

2.96 Find the value of V_x in the network in Fig. P2.96, such that the 5-A current source supplies 50 W.

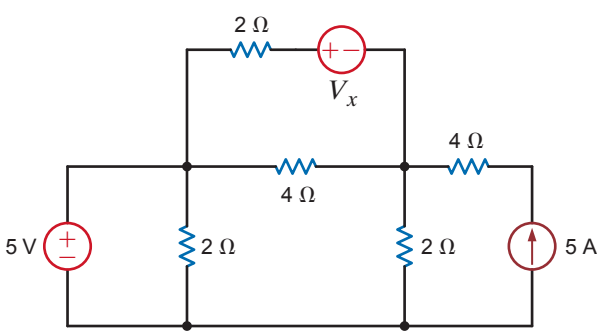

Figure P2.96

2.97 The 5-A current source in Fig. P2.97 supplies 150 W. Calculate V_A.

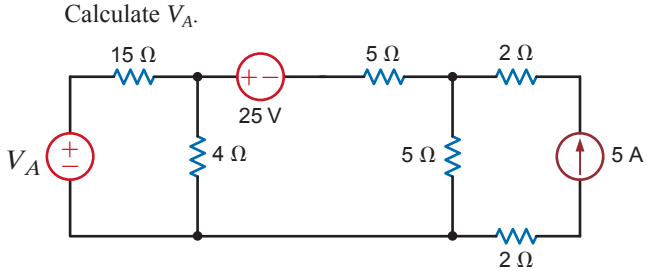

Figure P2.97

2.98 Given $I_o = 2$ mA in the circuit in Fig. P2.98, find I_A.

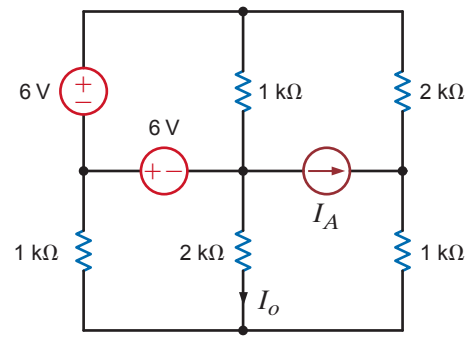

Figure P2.98

2.99 Given $I_o = 2$ mA in the network in Fig. P2.99, find V_A.

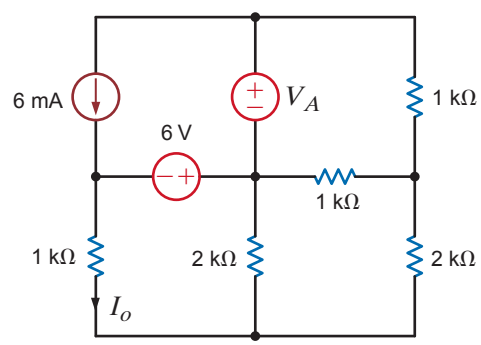

Figure P2.99

2.100 Given V_o in the network in Fig. P2.100, find I_A.

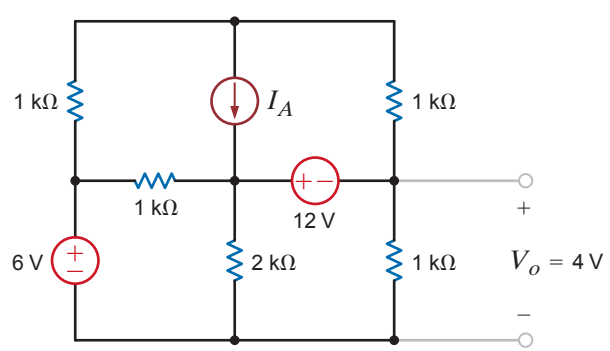

Figure P2.100

2.101 Find the value of V_x in the circuit in Fig. P2.101 such that the power supplied by the 5-A source is 60 W.

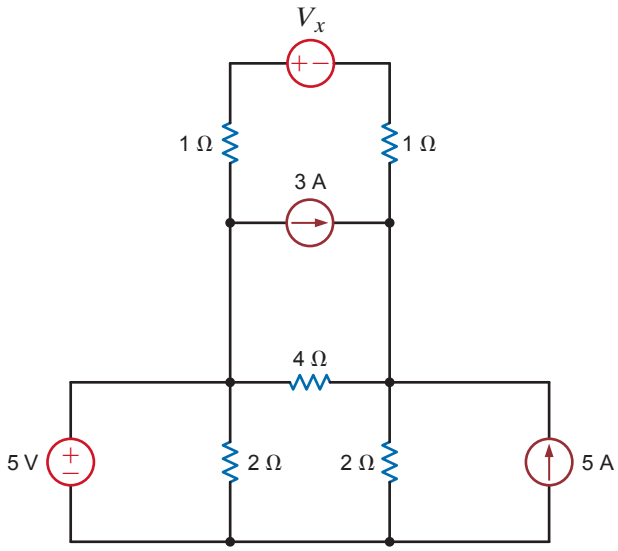

Figure P2.101

2.102 The 3-A current source in Fig. P2.102 is absorbing 12 W. Determine R.

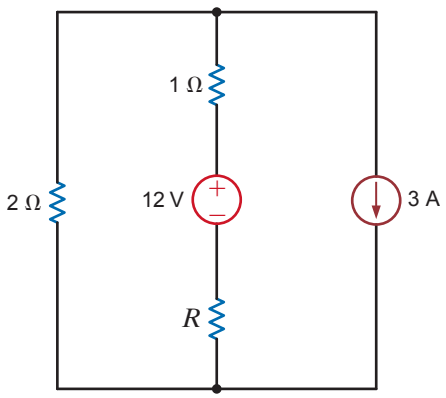

Figure P2.102

2.103 If the power supplied by the 50-V source in Fig. P2.103 is 100 W, find R.

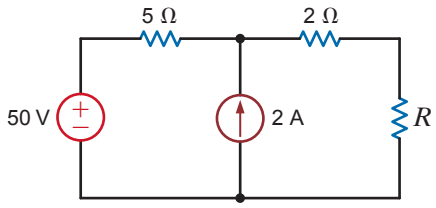

Figure P2.103

2.104 Given that $V_1 = 4$ V, find V_A and R_B in the circuit in Fig. P2.104.

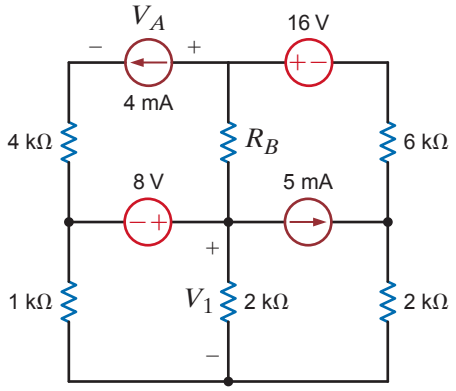

Figure P2.104

2.105 Find the power absorbed by the network in Fig. P2.105.

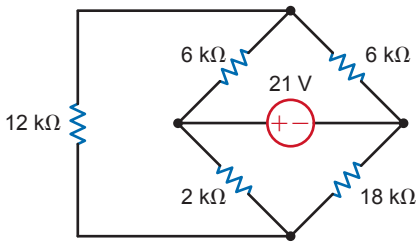

Figure P2.105

2.106 Find the value of g in the network in Fig. P2.106 such that the power supplied by the 3-A source is 20 W.

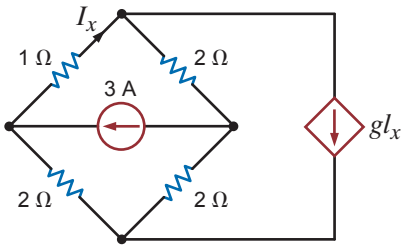

Figure P2.106

2.107 Find the power supplied by the 24-V source in the circuit in Fig. P2.107.

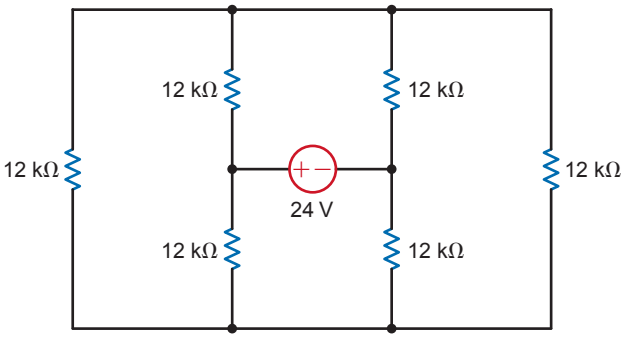

Figure P2.107

2.108 Find I_o in the circuit in Fig. P2.108.

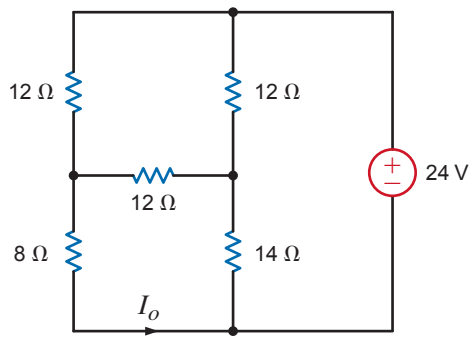

Figure P2.108

2.109 Find I_o in the circuit in Fig. P2.109.

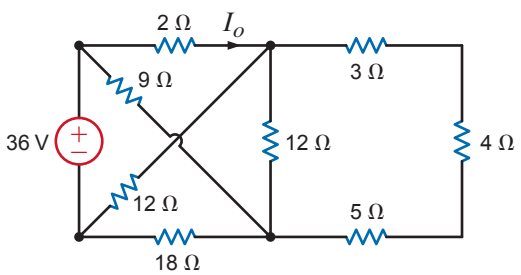

Figure P2.109

2.110 Determine the value of V_o in the network in Fig. P2.110.

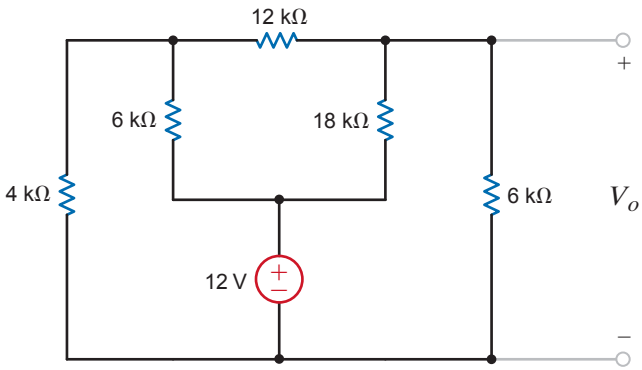

Figure P2.110

2.111 Find V_o in the circuit in Fig. P2.111.

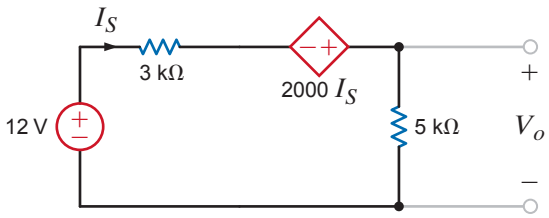

Figure P2.111

2.112 Find V_o in the network in Fig. P2.112.

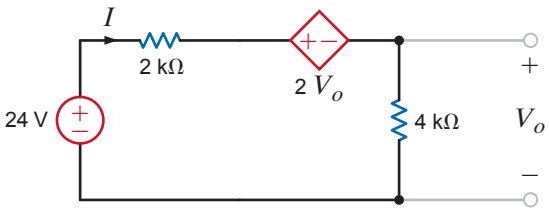

Figure P2.112

2.113 Find I_o in the circuit in Fig. P2.113.

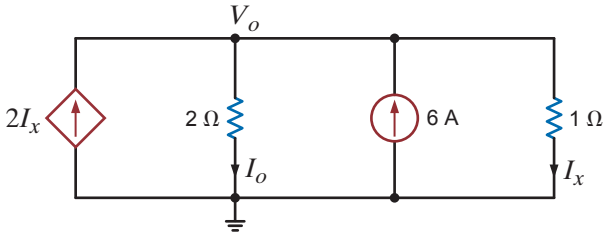

Figure P2.113

2.114 Find I_o in the circuit in Fig. P2.114.

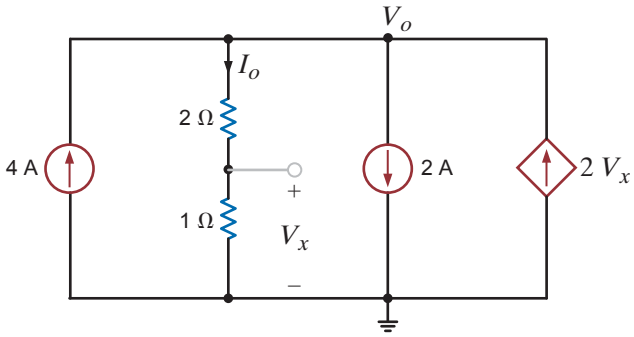

Figure P2.114

2.115 Find V_o in the circuit in Fig. P2.115.

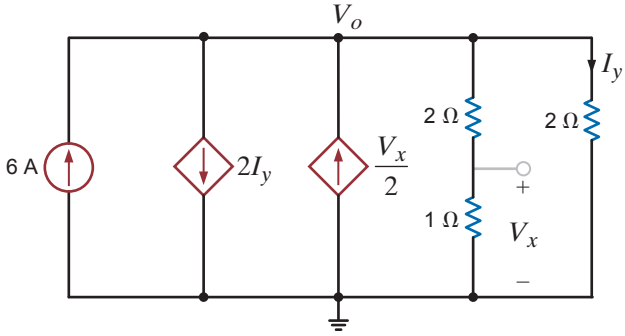

Figure P2.115

2.116 Find V_x in the network in Fig. P2.116.

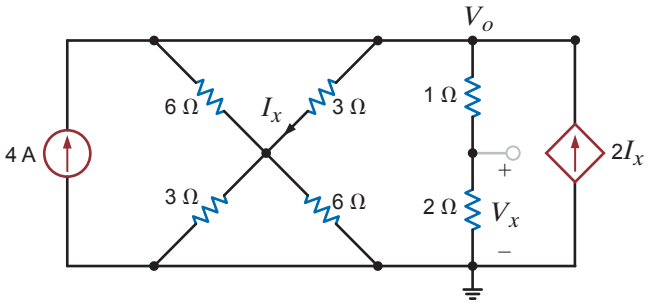

Figure P2.116

2.117 Find V_o in the network in Fig. P2.117.

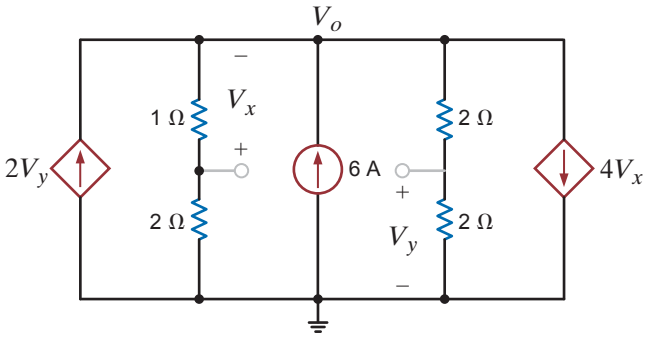

Figure P2.117

2.118 Find I_1, I_2, and I_3 in the circuit in Fig. P2.118.

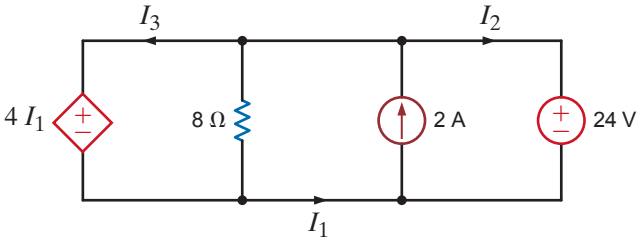

Figure P2.118

2.119 Find I_o in the network in Fig. P2.119.

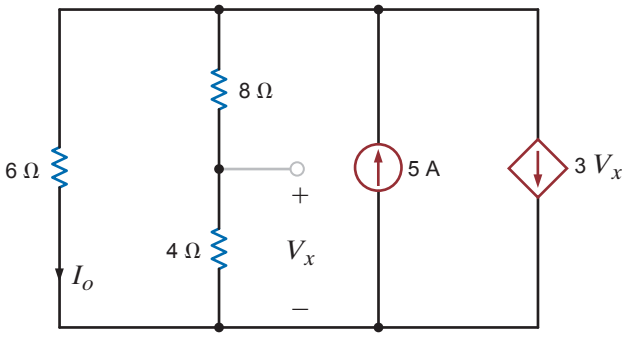

Figure P2.119

2.120 A typical transistor amplifier is shown in Fig. P2.120. Find the amplifier gain G (i.e., the ratio of the output voltage to the input voltage).

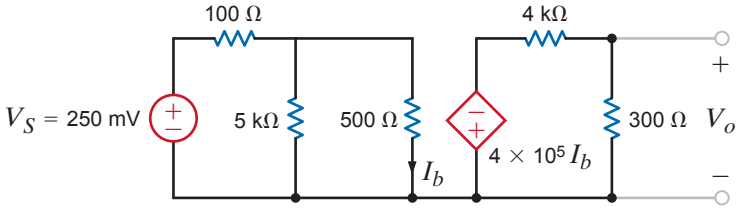

Figure P2.120

2.121 Find the value of k in the network in Fig. P2.121, such that the power supplied by the 6-A source is 108 W.

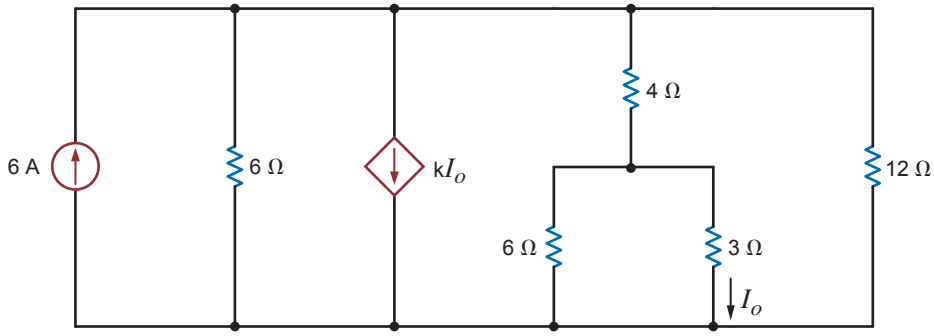

Figure P2.121

2.122 Find the power supplied by the dependent current source in Fig. P2.122.

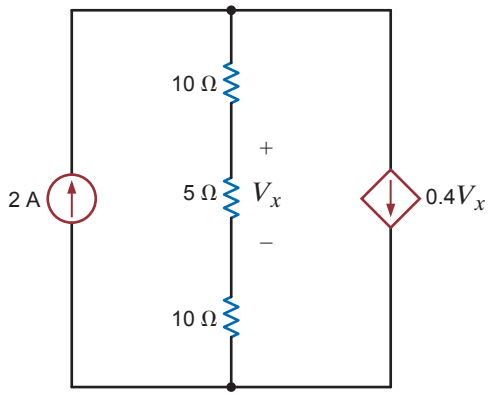

Figure P2.122

2.123 If the power absorbed by the 10-V source in Fig. P2.123 is 40 W, calculate I_S.

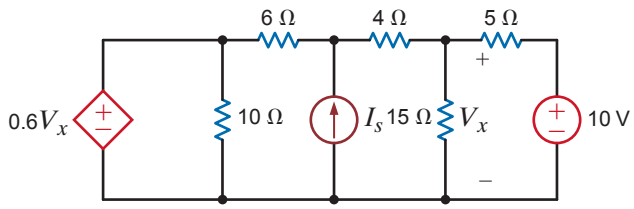

Figure P2.123

2.124 The power supplied by the 2-A current source in Fig. P2.124 is 50 W, calculate k.

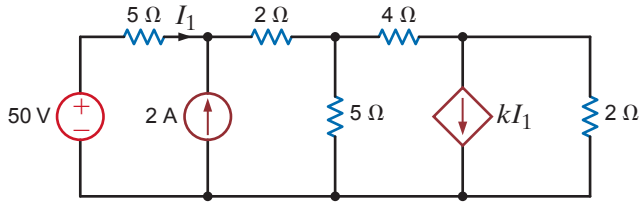

Figure P2.124

2.125 Given the circuit in Fig. P2.125, solve for the value of k.

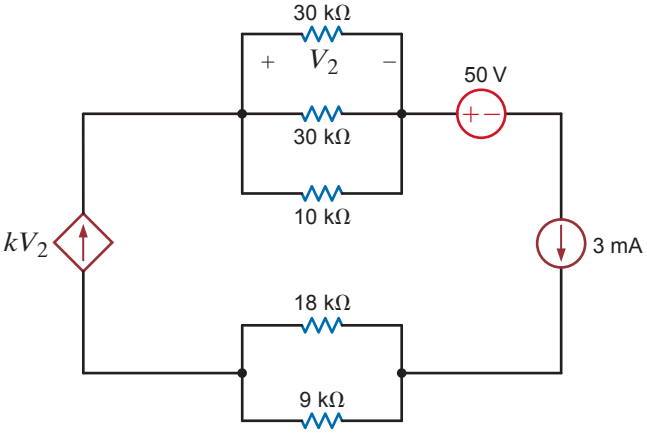

Figure P2.125

TYPICAL PROBLEMS FOUND ON THE FE EXAM

2FE-1 What is the power generated by the source in the network in Fig. 2PFE-1?

a. 2.8 W
b. 1.2 W
c. 3.6 W
d. 2.4 W

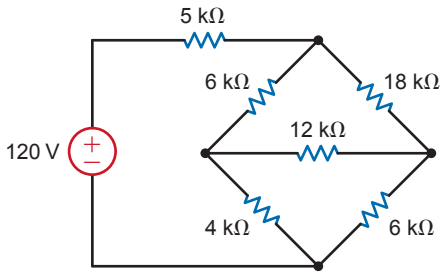

Figure 2PFE-1

2FE-2 Find V_{ab} in the circuit in Fig. 2PFE-2.

a. −5 V
b. 10 V
c. 15 V
d. −10 V

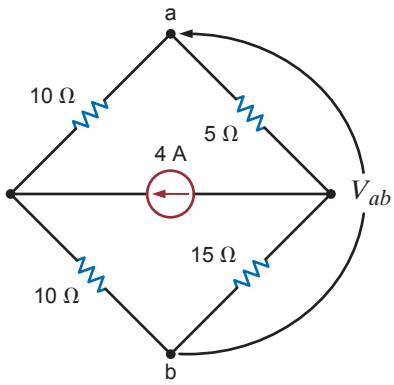

Figure 2PFE-2

2FE-3 If $R_{eq} = 10.8\ \Omega$ in the circuit in Fig. 2PFE-3, what is R_2 ?

a. 12 Ω

b. 20 Ω

c. 8 Ω

d. 18 Ω

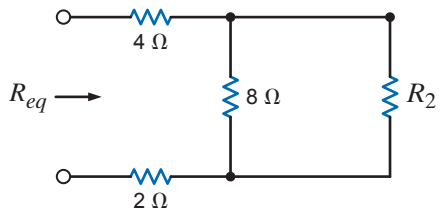

Figure 2PFE-3

2FE-4 Find the equivalent resistance of the circuit in Fig. 2PFE-4 at the terminals *A*-*B*.

a. 4 kΩ

b. 12 kΩ

c. 8 kΩ

d. 20 kΩ

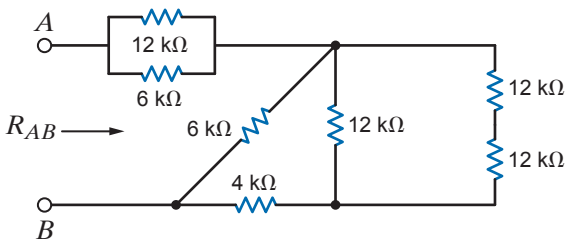

Figure 2PFE-4

2FE-5 The 100 V source is absorbing 50 W of power in the network in Fig. 2PFE-5. What is *R*?

a. 17.27 Ω

b. 9.42 Ω

c. 19.25 Ω

d. 15.12 Ω

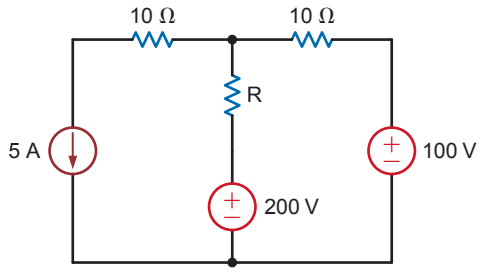

Figure 2PFE-5

2FE-6 Find the power supplied by the 40 V source in the circuit in Fig. 2PFE-6.

a. 120 W

b. 232 W

c. 212 W

d. 184 W

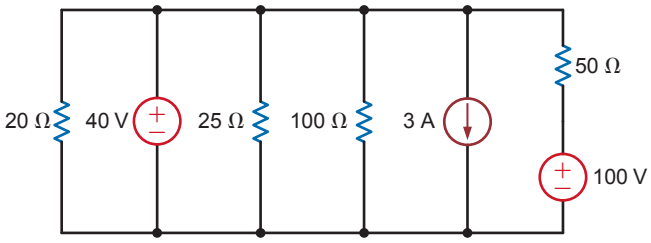

Figure 2PFE-6

2FE-7 What is the current I_o in the circuit in Fig. 2PFE-7?

a. 0.84 mA

b. −1.25 mA

c. 2.75 mA

d. −0.22 mA

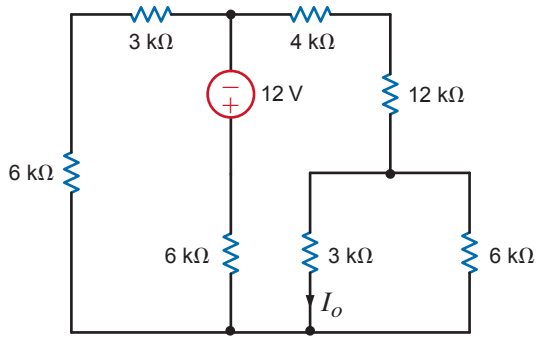

Figure 2PFE-7

2FE-8 Find the voltage V_o in the network in Fig. 2PFE-8.

a. 24 V

b. 10 V

c. 36 V

d. 12 V

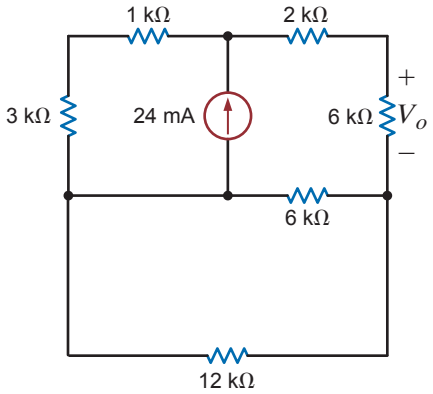

Figure 2PFE-8

2FE-9 What is the voltage V_o in the circuit in Fig. 2PFE-9?

a. 2 V

b. 8 V

c. 5 V

d. 12 V

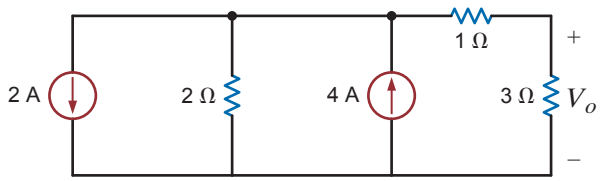

Figure 2PFE-9

2FE-10 Find the current I_x in Fig. 2PFE-10.

a. 1/2 A

b. 5/3 A

c. 3/2 A

d. 8/3 A

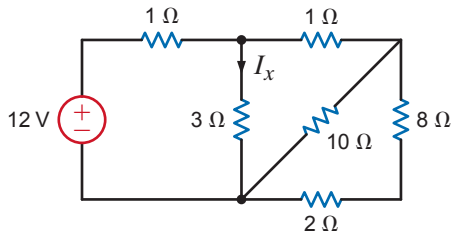

Figure 2PFE-10